MEASUMAX 34-515

Centering Dial Indicator

0 - 3mm

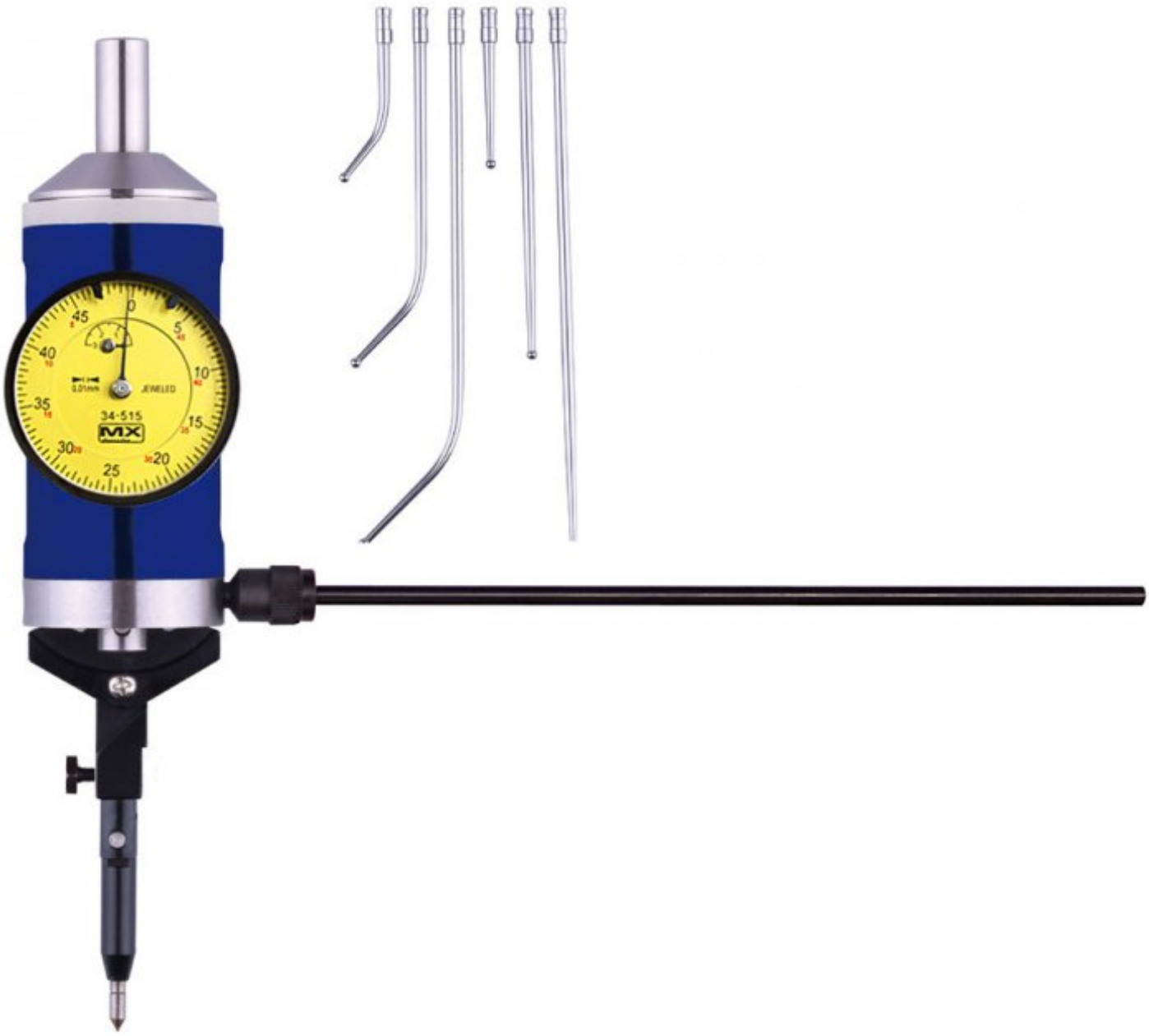

MEASUMAX Centering Dial Indicator 34-515

Jeweled Metric Dial

Stylus Shown Attached

Stylus

Centre Dial

Wooden Box

Description

Used to locate a work piece center quickly and accurately whilst the indicator faces the operator at all times by way of a restraining arm.

Features

- Quick and accurate centering internal & external
- Operates at any angle from horizontal to vertical
- The dial indicator remains stationary while rotating the spindle manually.
- The set includes 7 stylus probes and a restraining arm.
- Packed in wooden box

Specifications

MEASUMAX Centering Dial Indicator 34-515

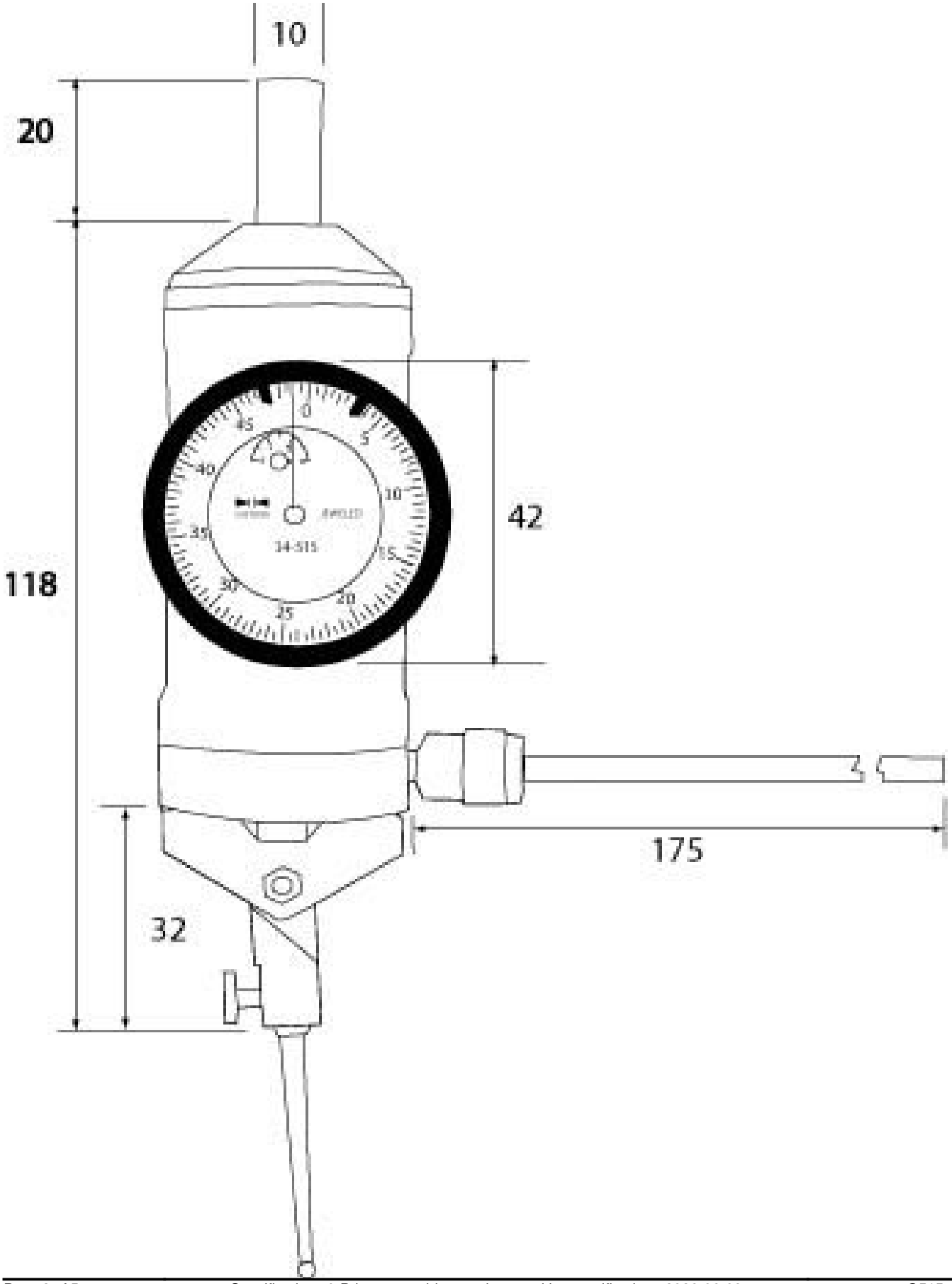

MEASUMAX Centering Dial Indicator 34-515

ORDER CODE

MEASUMAX Centering Dial Indicator 34-515

Q515

Range (mm)	0 - 3mm
Graduations (mm)	0.01mm
Straight Stylus (mm)	45, 100, 154
Curved Stylus (mm)	45, 100, 154
Swivel Point Stylus (mm)	52.5
Stylus Diameter (mm)	3
Mount (mm)	10