HAFCO LG-10

Lathe Safety Chuck Guard

255mm Centre Height

Tools 4 Industry
www.t4i.co.nz
sales@t4i.co.nz

HAFCO Lathe Safety Chuck Guard LG-10

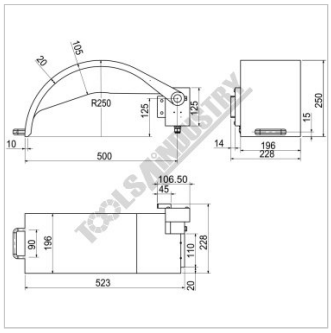

Dimensions

Features

- Retro fits to lathe headstock with a 255mm centre height
- Suits up to Ø350mm lathe chucks
- Swivel steel safety chuck guard with handle
- Includes safety chuck guard, mounting bracket with micro switch and wiring
- Micro switch recommended for 12V or 24V
- Installation required by a licensed electrician

Specifications

ORDER CODE	G614
MODEL	LG-10
Guard Type	Safety Chuck Guard
Material Type	Steel
Leadscrew Cover Width (mm)	~
Suits Lathe - Distance Between Centres (mm)	~
Suits Lathe Centre Height (mm)	255
Suits Lathe Chuck Size Max. (mm)	Ø350